RoHS RoHS-Compliant

Reversible Motors

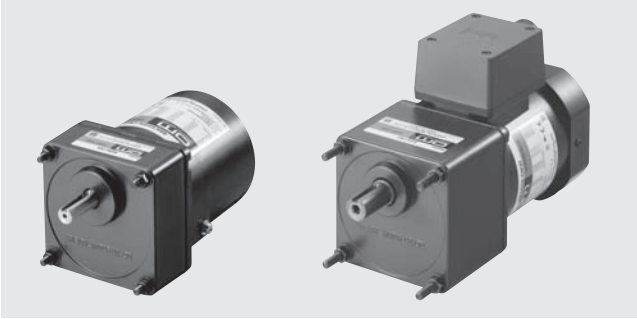

Features

●Optimal for Bi-Directional Operation

These are 30 minutes rated motors that can change directions instantaneously. They are designed for applications where reversal of direction is frequently required.

∗30 minutes rating: The motors may be operated continuously for 30 minutes, but depending on operating conditions (intermittent operation, etc), they can be operated for more than 30 minutes.

Safety Standards and CE Marking

Standards	Certification Body	Standards File No.	CE Marking
UL 1004 UL 2111	UL	E64199 (1 W～6 W Type) E64197 (15 W～90 W Type)	Low Voltage Directives
CSA C22.2 No.100 CSA C22.2 No.77			
EN 60950-1 EN 60034-1 EN 60034-5 IEC 60664-1	Conform to EN/IEC Standards		
GB 12350	CQC	2005010401150787 (Single-Phase 1 W Type) 2003010401091525 (Single-Phase 6 W Type) 2003010401091522 (Single-Phase 15 W～90 W Type)	

●When the motor is approved under various safety standards, the model name on the nameplate is the approved model name.

System Configuration

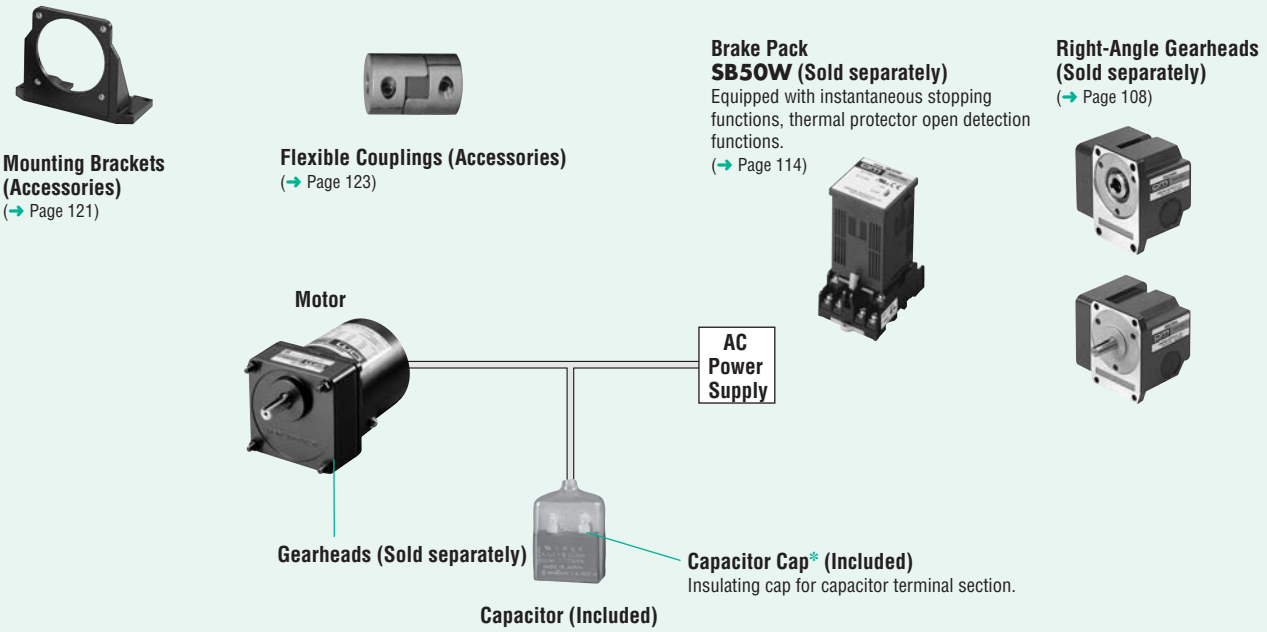

●Example of System Configuration

(Body) (Sold separately)

Motor (Pinion Shaft)		Long Life/Low Noise GN-S Gearhead	Mounting Bracket	Flexible Coupling
4RK25GN-CW2E	+	4GN25S	SOL4M5	MCL301012
		◎	○	○

◎: Required under this system.
○: Selectable according to necessity. Oriental Motor provides.
*Capacitor cap is included.

●The system configuration shown above is an example. Other configurations are available.

Product Number Code

●Motor

5 R K 40 GN - CW 2 T E

① ② ③ ④ ⑤ ⑥ ⑦ ⑧ ⑨

①	Motor Frame Size	**0**: 42 mm **2**: 60 mm **3**: 70 mm **4**: 80 mm **5**: 90 mm
②	Motor Type	**R**: Reversible Motor
③	Series	**K**: **K** Series
④	Output Power (W)	(Example) **40**: 40 W
⑤	Motor Shaft Type	**GN**: **GN** Type Pinion Shaft **GE**: **GE** Type Pinion Shaft **A**: Round Shaft
⑥	Power Supply Voltage	**AW**: Single-Phase 100 VAC, 110/115 VAC **CW**: Single-Phase 200 VAC, 220/230 VAC
⑦	**2**, **3**: RoHS-Compliant	
⑧	**T**, **B**: Terminal Box Type	
⑨	Included Capacitor	**J**: For Single-Phase 100 VAC, 200 VAC **U**: For Single-Phase 110/115 VAC **E**: For Single-Phase 220/230 VAC

●The **J**, **U** and **E** at the end of the model name indicate that the unit includes a capacitor. These letters are not listed on the motor nameplate. When the motor is approved under various safety standards, the model name on the nameplate is the approved model name.
(Example) Model: **5RK40GN-CW2E** ➜ Motor nameplate and product approved under various safety standards: **5RK40GN-CW2**

●Gearhead

5 GN 50 S

① ② ③ ④

①	Gearhead Frame Size	**0**: 42 mm **2**: 60 mm **3**: 70 mm **4**: 80 mm **5**: 90 mm	
②	Type of Pinion	**GN**: **GN** Type Pinion **GE**: **GE** Type Pinion	
③	Gear Ratio	(Example) **50**: Gear Ratio of 1:50 **10X** denotes the decimal gearhead of gear ratio 1:10	
④	**GN** Type Pinion	**S**: Long Life/Low Noise **GN-S** Gearhead, RoHS-Compliant **RH**: Right-Angle/Hollow Shaft Gearhead, RoHS-Compliant	**K**: **GN-K** Gearhead* **RA**: Right-Angle/Solid Shaft Gearhead, RoHS-Compliant
	GE Type Pinion	**S**: Long Life **GE-S** Gearhead, RoHS-Compliant **RH**: Right-Angle/Hollow Shaft Gearhead, RoHS-Compliant	**RA**: Right-Angle/Solid Shaft Gearhead, RoHS-Compliant

*GN-K gearhead of frame size 42 mm complies to RoHS directive.

General Specifications of Motors

1 W Type

Item	Specifications
Insulation Resistance	100 MΩ or more when 500 VDC megger is applied between the windings and the frame after rated motor operation under normal ambient temperature and humidity.
Dielectric Strength	Sufficient to withstand 1.5 kV at 50 Hz or 60 Hz applied between the windings and the frame for 1 minute after rated motor operation under normal ambient temperature and humidity.
Temperature Rise	Temperature rise of windings are 75°C or less measured by the resistance change method after rated motor operation under normal ambient temperature and humidity, with connecting a gearhead or equivalent heat radiation plate*.
Insulation Class	UL/CSA standards: Class A (105°C), EN standards: Class E (120°C)
Overheat Protection	Impedance protected
Ambient Temperature	−10°C～+40°C (nonfreezing)
Ambient Humidity	85% or less (noncondensing)
Degree of Protection	IP20

6 W～90 W Type

Item	Specifications
Insulation Resistance	100 MΩ or more when 500 VDC megger is applied between the windings and the frame after rated motor operation under normal ambient temperature and humidity.
Dielectric Strength	Sufficient to withstand 1.5 kV at 50 Hz or 60 Hz applied between the windings and the frame for 1 minute after rated motor operation under normal ambient temperature and humidity.
Temperature Rise	Temperature rise of windings are 80°C or less measured by the resistance change method after rated motor operation under normal ambient temperature and humidity, with connecting a gearhead or equivalent heat radiation plate*. However, a heat radiation plate that is 200×200 mm with a thickness of 5 mm is necessary even when the gearhead is connected for the 90 W type.
Insulation Class	Class B (130°C)
Overheat Protection	6 W type has impedance protection. All others have built-in thermal protector (automatic return type) Operating temperature; open: 130°C ± 5°C, close: 82°C ± 15°C
Ambient Temperature	Single-phase 100 VAC, Single-phase 200 VAC: −10°C～+50°C (nonfreezing) Other voltage: −10°C～+40°C (nonfreezing)
Ambient Humidity	85% or less (noncondensing)
Degree of Protection	Lead Wire Type: IP20 Terminal Box Type: 6 W Type IP65 (excluding the installation surface of the round shaft type) 25 W, 40 W, 60 W, 90 W Type IP40

*Heat radiation plate (Material: Aluminum)

Motor Type	Size (mm)	Thickness (mm)
1 W Type	80×80	5
6 W Type	115×115	
15 W Type	125×125	
25 W Type	135×135	
40 W Type	165×165	
60 W Type	200×200	
90 W Type	200×200	10

RoHS

Reversible Motors

1 W

Frame Size: □42 mm

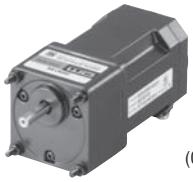

(Gearhead sold separately)

Specifications – 30 Minutes Rating RoHS

Model Lead Wire Type		Output Power	Voltage	Frequency	Current	Starting Torque	Rated Torque	Rated Speed	Capacitor
Pinion Shaft Type	Round Shaft Type	W	VAC	Hz	A	mN·m	mN·m	r/min	μF
ZP 0RK1GN-AW2J	0RK1A-AW2J	1	Single-Phase 100	50	0.120	8	10	1000	1.8
				60	0.125		8	1200	
ZP 0RK1GN-AW3U	0RK1A-AW3U	1	Single-Phase 110	60	0.090	8	8	1200	1.2
			Single-Phase 115		0.095				
ZP 0RK1GN-CW2J	0RK1A-CW2J	1	Single-Phase 200	50	0.066	8	10	1000	0.45
				60	0.069		8	1200	

- Values shown for rated torque and starting torque are measured for operation without the friction brake installed.
- The **J** and **U** at the end of the model name indicate that the unit includes a capacitor. These letters are not listed on the motor nameplate. When the motor is approved under various safety standards, the model name on the nameplate is the approved model name.

ZP: Impedance protected

Product Line

Motor RoHS

Type	Model	
	Pinion Shaft Type	Round Shaft Type
Lead Wire	0RK1GN-AW2J	0RK1A-AW2J
	0RK1GN-AW3U	0RK1A-AW3U
	0RK1GN-CW2J	0RK1A-CW2J

Gearhead (Sold Separately) RoHS

Type	Gearhead Model	Gear Ratio
Parallel Shaft	0GN□K	3, 3.6, 5, 6, 7.5, 9, 12.5, 15, 18, 25, 30, 36, 50, 60, 75, 90, 100, 120, 150, 180

- Enter the gear ratio in the box (□) within the model name.

Gearmotor – Torque Table

- Gearheads are sold separately. Decimal gearheads are not available.
- Enter the gear ratio in the box (□) within the model name.
- A colored background ▭ indicates gear shaft rotation in the same direction as the motor shaft, while the others rotate in the opposite direction.
- The speed is calculated by dividing the motor's synchronous speed (50 Hz: 1500 r/min, 60 Hz: 1800 r/min) by the gear ratio. The actual speed is 2 - 33% less than the displayed value, depending on the size of the load.

◇50 Hz

Unit = N·m

Model	Speed r/min	500	416	300	250	200	166	120	100	83	60	50	41	30	25	20	16	15	12.5	10	8.3
Motor/ Gearhead	Gear Ratio	3	3.6	5	6	7.5	9	12.5	15	18	25	30	36	50	60	75	90	100	120	150	180
0RK1GN-AW2J 0RK1GN-CW2J / 0GN□K		0.024	0.029	0.041	0.049	0.061	0.073	0.091	0.11	0.13	0.17	0.2	0.24	0.33	0.4	0.44	0.53	0.59	0.71	0.89	1

◇60 Hz

Unit = N·m

Model	Speed r/min	600	500	360	300	240	200	144	120	100	72	60	50	36	30	24	20	18	15	12	10
Motor/ Gearhead	Gear Ratio	3	3.6	5	6	7.5	9	12.5	15	18	25	30	36	50	60	75	90	100	120	150	180
0RK1GN-AW2J 0RK1GN-AW3U 0RK1GN-CW2J / 0GN□K		0.019	0.023	0.032	0.039	0.049	0.058	0.073	0.088	0.11	0.13	0.16	0.19	0.26	0.32	0.35	0.42	0.47	0.57	0.71	0.85

■Permissible Overhung Load and Permissible Thrust Load

Motor (Round shaft type) ➜ Page 107
Gearhead ➜ Page 107

■Permissible Load Inertia J for Gearhead

➜ Page 107

■Dimensions (Unit = mm)

Mounting screws are included with gearheads.

◇Lead Wire Type

Mass: Motor 0.3 kg
Gearhead 0.2 kg

CAD A441

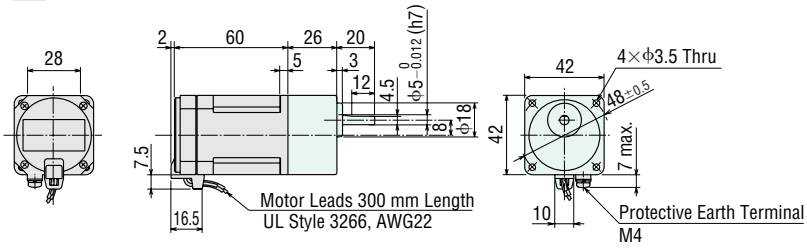

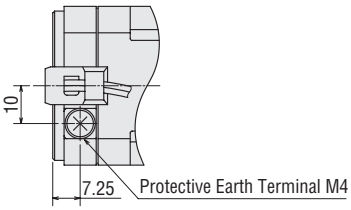

Detail Drawing of Protective Earth Terminal

◇Shaft Section of Round Shaft Type

The mass and motor's dimensions (excluding the shaft section) are the same as those of the pinion shaft type.

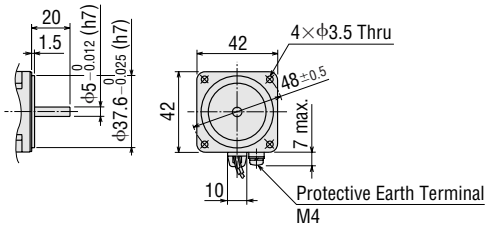

◇Capacitor (Included with the motors)

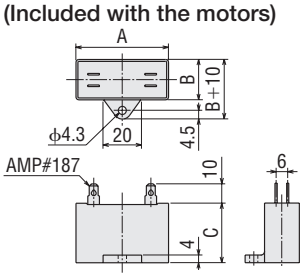

◇Capacitor Dimensions (mm)

Model		Capacitor Model	A	B	C	Mass (g)	Capacitor Cap
Pinion Shaft Type	Round Shaft Type						
0RK1GN-AW2J	**0RK1A-AW2J**	CH18FAUL	31	14.5	23.5	18	Included
0RK1GN-AW3U	**0RK1A-AW3U**	CH12FAUL	31	14.5	23.5	18	
0RK1GN-CW2J	**0RK1A-CW2J**	CH045BFAUL	31	17	27	24	

■Connection Diagrams

●The direction of motor rotation is as viewed from the shaft end of the motor. CW represents the clockwise direction, while CCW represents the counterclockwise direction.
●Connection diagrams are also valid for the equivalent round shaft type.

0RK1GN-AW2J
0RK1GN-AW3U
0RK1GN-CW2J

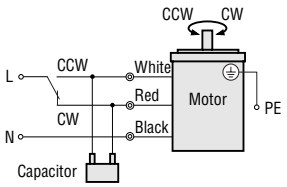

Clockwise:
To rotate the motor in a clockwise (CW) direction, turn the switch to CW.
Counterclockwise:
To rotate the motor in a counterclockwise (CCW) direction, turn the switch to CCW.

PE: Protective Earth
Note:
Connect a CR circuit to the forward/reverse select switch to protect the contact.
EPCR1201-2 is available as an optional surge suppressor. ➜ Page 123

RoHS

Reversible Motors

6 W

Frame Size: □60 mm

Lead Wire Type

Terminal Box Type

(Gearhead sold separately)

Specifications – 30 Minutes Rating RoHS

Model Upper Model Name: Pinion Shaft Type Lower Model Name ( ): Round Shaft Type		Output Power	Voltage	Frequency	Current	Starting Torque	Rated Torque	Rated Speed	Capacitor
Lead Wire Type Dimension ①	Terminal Box Type Dimension ②	W	VAC	Hz	A	mN·m	mN·m	r/min	μF
ZP **2RK6GN-AW2J (2RK6A-AW2J)**	**2RK6GN-AW2BJ (2RK6A-AW2BJ)**	6	Single-Phase 100	50	0.257	50	49	1150	4.5
				60	0.307	45	41	1400	
ZP **2RK6GN-AW2U (2RK6A-AW2U)**	**2RK6GN-AW2BU (2RK6A-AW2BU)**	6	Single-Phase 110	60	0.251	45	41	1450	3.5
			Single-Phase 115		0.256				
ZP **2RK6GN-CW2J (2RK6A-CW2J)**	**2RK6GN-CW2BJ (2RK6A-CW2BJ)**	6	Single-Phase 200	50	0.120	50	49	1150	1.0
				60	0.138	45	41	1400	
ZP **2RK6GN-CW2E (2RK6A-CW2E)**	**2RK6GN-CW2BE (2RK6A-CW2BE)**	6	Single-Phase 220	50	0.113	45	49	1150	0.8
				60	0.117		41	1450	
			Single-Phase 230	50	0.117	50	49	1200	
				60	0.120	45	41	1450	

- Values shown for rated torque and starting torque are measured for operation without the friction brake installed.
- The **J**, **U** and **E** at the end of the model name indicate that the unit includes a capacitor. These letters are not listed on the motor nameplate.
  When the motor is approved under various safety standards, the model name on the nameplate is the approved model name.

ZP: Impedance protected

Product Line

Motor RoHS

Type	Model	
	Pinion Shaft Type	Round Shaft Type
Lead Wire	**2RK6GN-AW2J**	**2RK6A-AW2J**
	2RK6GN-AW2U	**2RK6A-AW2U**
	2RK6GN-CW2J	**2RK6A-CW2J**
	2RK6GN-CW2E	**2RK6A-CW2E**
Terminal Box	**2RK6GN-AW2BJ**	**2RK6A-AW2BJ**
	2RK6GN-AW2BU	**2RK6A-AW2BU**
	2RK6GN-CW2BJ	**2RK6A-CW2BJ**
	2RK6GN-CW2BE	**2RK6A-CW2BE**

Gearhead (Sold Separately) RoHS

Type	Gearhead Model	Gear Ratio
Long Life/Low Noise/ Parallel Shaft	**2GN□S**	**3, 3.6, 5, 6, 7.5, 9, 12.5, 15, 18, 25, 30, 36, 50, 60, 75, 90, 100, 120, 150, 180**
	2GN10XS (Decimal gearhead)	

- Enter the gear ratio in the box (□) within the model name.

Gearmotor – Torque Table

- Gearheads and decimal gearheads are sold separately.
- Enter the code that represents the terminal box type "**B**" in the box (■) within the model name.
- Enter the gear ratio in the box (□) within the model name.
- A colored background ▭ indicates gear shaft rotation in the same direction as the motor shaft, while the others rotate in the opposite direction.
- The speed is calculated by dividing the motor's synchronous speed (50 Hz: 1500 r/min, 60 Hz: 1800 r/min) by the gear ratio. The actual speed is 2 - 20% less than the displayed value, depending on the size of the load.
- To reduce the speed beyond the gear ratio in the table, attach a decimal gearhead (gear ratio: 10) between the gearhead and the motor. In that case, the permissible torque is 3 N·m.

◇50 Hz

Unit = N·m

Model	Speed r/min	500	416	300	250	200	166	120	100	83	60	50	41	30	25	20	16	15	12.5	10	8.3
Motor/ Gearhead	Gear Ratio	**3**	**3.6**	**5**	**6**	**7.5**	**9**	**12.5**	**15**	**18**	**25**	**30**	**36**	**50**	**60**	**75**	**90**	**100**	**120**	**150**	**180**
2RK6GN-AW2■J **2RK6GN-CW2■J** **2RK6GN-CW2■E**	**2GN□S**	0.12	0.14	0.20	0.24	0.30	0.36	0.50	0.60	0.71	0.89	1.1	1.3	1.6	1.9	2.4	2.9	3	3	3	3

◇60 Hz

Unit = N·m

Model	Speed r/min	600	500	360	300	240	200	144	120	100	72	60	50	36	30	24	20	18	15	12	10
Motor/ Gearhead	Gear Ratio	**3**	**3.6**	**5**	**6**	**7.5**	**9**	**12.5**	**15**	**18**	**25**	**30**	**36**	**50**	**60**	**75**	**90**	**100**	**120**	**150**	**180**
2RK6GN-AW2■J **2RK6GN-AW2■U** **2RK6GN-CW2■J** **2RK6GN-CW2■E**	**2GN□S**	0.10	0.12	0.17	0.20	0.25	0.30	0.42	0.50	0.60	0.75	0.90	1.1	1.4	1.6	2.0	2.4	2.7	3	3	3

Permissible Overhung Load and Permissible Thrust Load

Motor (Round shaft type) ➜ Page 107
Gearhead ➜ Page 107

Permissible Load Inertia J for Gearhead

➜ Page 107

Dimensions (Unit = mm)

Mounting screws are included with gearheads.

◇Lead Wire Type ①

Mass: Motor 0.7 kg
Gearhead 0.4 kg

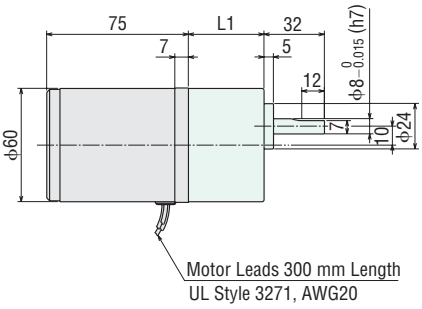

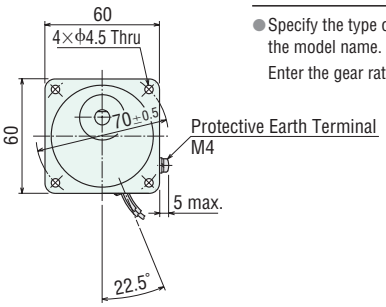

Motor Model	Gearhead Model	Gear Ratio	L1	CAD
2RK6GN-AW2■ **2RK6GN-CW2■**	**2GN□S**	**3～18**	30	A443A
		25～180	40	A443B

- Specify the type of the capacitor to be included by entering **J**, **U** or **E** in the box (■) within the model name.
  Enter the gear ratio in the box (□) within the model name.

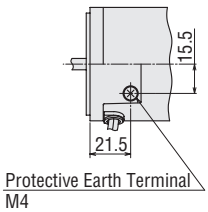

Detail Drawing of Protective Earth Terminal

◇Terminal Box Type ②

Mass: Motor 0.9 kg
Gearhead 0.4 kg

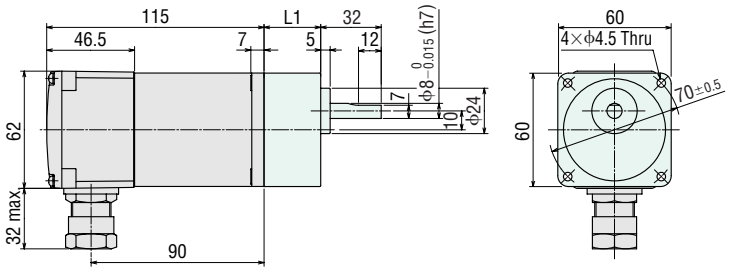

Motor Model	Gearhead Model	Gear Ratio	L1	CAD
2RK6GN-AW2B□ **2RK6GN-CW2B□**	**2GN□S**	**3~18**	30	A445A
		25~180	40	A445B

● Specify the type of the capacitor to be included by entering **J**, **U** or **E** in the box (□) within the model name.
Enter the gear ratio in the box (□) within the model name.

● Use cable with a diameter of ϕ8 ~ ϕ12 mm.

◇Shaft Section of Round Shaft Type

The mass and motor's dimensions (excluding the shaft section) are the same as those of the pinion shaft type.

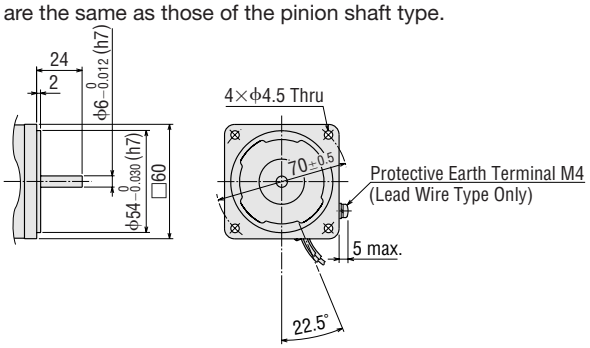

◇Decimal Gearhead

Can be connected to **GN** pinion shaft type.

2GN10XS

Mass: 0.2 kg

CAD A003

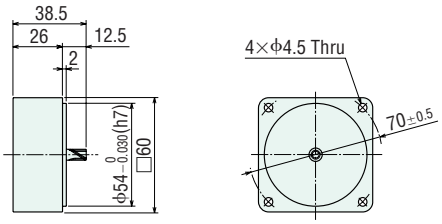

◇Capacitor
(Included with the motors)

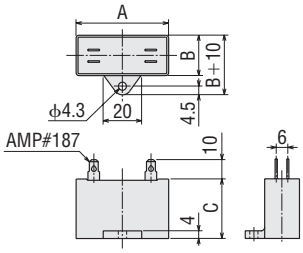

◇Capacitor Dimensions (mm)

Model Upper Model Name: Pinion Shaft Type Lower Model Name ( ): Round Shaft Type		Capacitor Model	A	B	C	Mass (g)	Capacitor Cap
Lead Wire Type	Terminal Box Type						
2RK6GN-AW2J (2RK6A-AW2J)	**2RK6GN-AW2BJ (2RK6A-AW2BJ)**	CH45FAUL2	37	18	27	30	Included
2RK6GN-AW2U (2RK6A-AW2U)	**2RK6GN-AW2BU (2RK6A-AW2BU)**	CH35FAUL2	31	17	27	25	
2RK6GN-CW2J (2RK6A-CW2J)	**2RK6GN-CW2BJ (2RK6A-CW2BJ)**	CH10BFAUL	37	18	27	30	
2RK6GN-CW2E (2RK6A-CW2E)	**2RK6GN-CW2BE (2RK6A-CW2BE)**	CH08BFAUL	31	17	27	20	

■Connection Diagrams

● The direction of motor rotation is as viewed from the shaft end of the motor. CW represents the clockwise direction, while CCW represents the counterclockwise direction.
● Connection diagrams are also valid for the equivalent round shaft type.
● Specify the type of the capacitor to be included by entering **J**, **U** or **E** in the box (□) within the model name.

Lead Wire Type	Terminal Box Type
2RK6GN-AW2□ **2RK6GN-CW2□**	**2RK6GN-AW2B□** **2RK6GN-CW2B□**

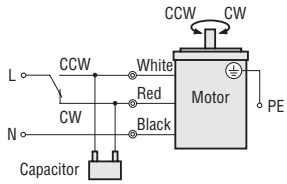

Clockwise
To rotate the motor in a clockwise (CW) direction, turn the switch to CW.

Counterclockwise
To rotate the motor in a counterclockwise (CCW) direction, turn the switch to CCW.

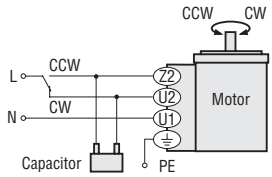

Clockwise
To rotate the motor in a clockwise (CW) direction, turn the switch to CW.

Counterclockwise
To rotate the motor in a counterclockwise (CCW) direction, turn the switch to CCW.

PE: Protective Earth

Note:
Connect a CR circuit to the forward/reverse select switch to protect the contact.
EPCR1201-2 is available as an optional surge suppressor. ➜ Page 123

RoHS

Reversible Motors

15 W

Frame Size: □70 mm

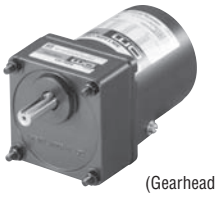

(Gearhead sold separately)

Specifications – 30 Minutes Rating RoHS

Model Lead Wire Type		Output Power	Voltage	Frequency	Current	Starting Torque	Rated Torque	Rated Speed	Capacitor
Pinion Shaft Type	Round Shaft Type	W	VAC	Hz	A	mN·m	mN·m	r/min	μF
TP 3RK15GN-AW2J	3RK15A-AW2J	15	Single-Phase 100	50	0.41	100	125	1200	7.5
				60	0.50		105	1450	
TP 3RK15GN-AW2U	3RK15A-AW2U	15	Single-Phase 110	60	0.41	100	105	1450	6.0
			Single-Phase 115		0.41				
TP 3RK15GN-CW2J	3RK15A-CW2J	15	Single-Phase 200	50	0.21	100	125	1200	1.8
				60	0.24		105	1450	
TP 3RK15GN-CW2E	3RK15A-CW2E	15	Single-Phase 220	50	0.20	100	125	1200	1.5
				60	0.21		105	1450	
			Single-Phase 230	50	0.20		125	1200	
				60	0.21		105	1450	

- Values shown for rated torque and starting torque are measured for operation without the friction brake installed.
- The **J**, **U** and **E** at the end of the model name indicate that the unit includes a capacitor. These letters are not listed on the motor nameplate. When the motor is approved under various safety standards, the model name on the nameplate is the approved model name.

TP: Contains a built-in thermal protector. If a motor overheats for any reason, the thermal protector is opened and the motor stops. When the motor temperature drops, the thermal protector closes and the motor restarts. Be sure to turn the motor off before inspecting.

Product Line

Motor RoHS

Type	Model	
	Pinion Shaft Type	Round Shaft Type
Lead Wire	3RK15GN-AW2J	3RK15A-AW2J
	3RK15GN-AW2U	3RK15A-AW2U
	3RK15GN-CW2J	3RK15A-CW2J
	3RK15GN-CW2E	3RK15A-CW2E

Gearhead (Sold Separately) RoHS

Type	Gearhead Model	Gear Ratio
Long Life/Low Noise/ Parallel Shaft	3GN□S	3, 3.6, 5, 6, 7.5, 9, 12.5, 15, 18, 25, 30, 36, 50, 60, 75, 90, 100, 120, 150, 180
	3GN10XS (Decimal gearhead)	

- Enter the gear ratio in the box (□) within the model name.

Gearmotor – Torque Table

- Gearheads and decimal gearheads are sold separately.
- Enter the gear ratio in the box (□) within the model name.
- A colored background ▭ indicates gear shaft rotation in the same direction as the motor shaft, while the others rotate in the opposite direction.
- The speed is calculated by dividing the motor's synchronous speed (50 Hz: 1500 r/min, 60 Hz: 1800 r/min) by the gear ratio. The actual speed is 2 - 20% less than the displayed value, depending on the size of the load.
- To reduce the speed beyond the gear ratio in the table, attach a decimal gearhead (gear ratio: 10) between the gearhead and the motor. In that case, the permissible torque is 5 N·m.

◇50 Hz

Unit = N·m

Model	Speed r/min	500	416	300	250	200	166	120	100	83	60	50	41	30	25	20	16	15	12.5	10	8.3
Motor/ Gearhead	Gear Ratio	**3**	**3.6**	**5**	**6**	**7.5**	**9**	**12.5**	**15**	**18**	**25**	**30**	**36**	**50**	**60**	**75**	**90**	**100**	**120**	**150**	**180**
3RK15GN-AW2J **3RK15GN-CW2J** **3RK15GN-CW2E**	**3GN□S**	0.30	0.36	0.51	0.61	0.76	0.91	1.3	1.5	1.8	2.3	2.7	3.3	4.1	5	5	5	5	5	5	5

◇60 Hz

Unit = N·m

Model	Speed r/min	600	500	360	300	240	200	144	120	100	72	60	50	36	30	24	20	18	15	12	10
Motor/ Gearhead	Gear Ratio	**3**	**3.6**	**5**	**6**	**7.5**	**9**	**12.5**	**15**	**18**	**25**	**30**	**36**	**50**	**60**	**75**	**90**	**100**	**120**	**150**	**180**
3RK15GN-AW2J **3RK15GN-AW2U** **3RK15GN-CW2J** **3RK15GN-CW2E**	**3GN□S**	0.26	0.31	0.43	0.51	0.64	0.77	1.1	1.3	1.5	1.9	2.3	2.8	3.5	4.2	5	5	5	5	5	5

Permissible Overhung Load and Permissible Thrust Load

Motor (Round shaft type) ➜ Page 107
Gearhead ➜ Page 107

Permissible Load Inertia J for Gearhead

➜ Page 107

Dimensions (Unit = mm)

Mounting screws are included with gearheads.

◇Lead Wire Type

Mass: Motor 1.1 kg
Gearhead 0.55 kg

Motor Model	Gearhead Model	Gear Ratio	L1	CAD
3RK15GN-AW2▢ **3RK15GN-CW2▢**	**3GN□S**	**3~18**	32	A447A
		25~180	42	A447B

- Specify the type of the capacitor to be included by entering **J**, **U** or **E** in the box (▢) within the model name.
  Enter the gear ratio in the box (□) within the model name.

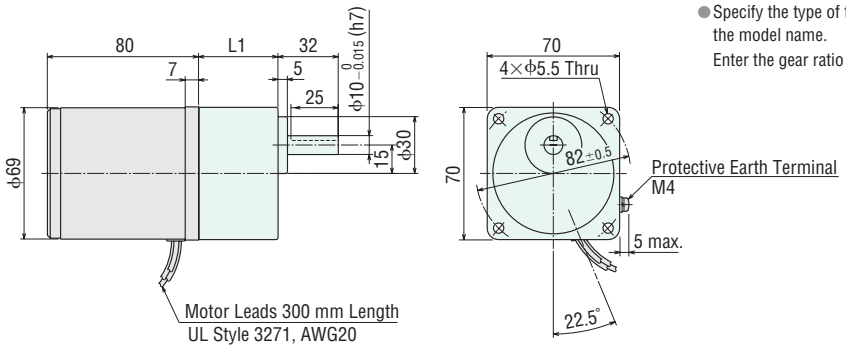

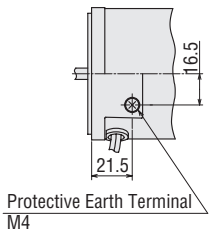

Detail Drawing of Protective Earth Terminal

◇Key and Key Slot (The key is included with the gearhead)

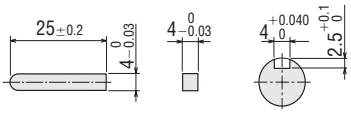

◇Shaft Section of Round Shaft Type

The mass and motor's dimensions (excluding the shaft section) are the same as those of the pinion shaft type.

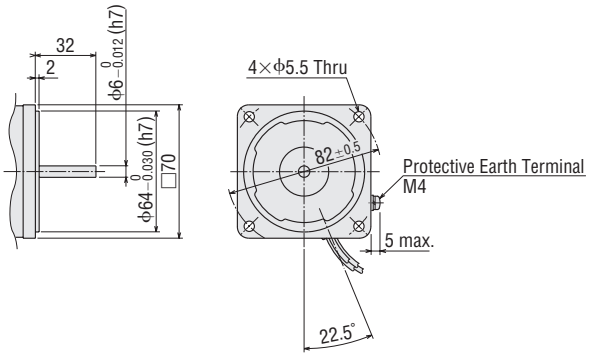

◇Decimal Gearhead

Can be connected to **GN** pinion shaft type.

3GN10XS

Mass: 0.3 kg

CAD A009

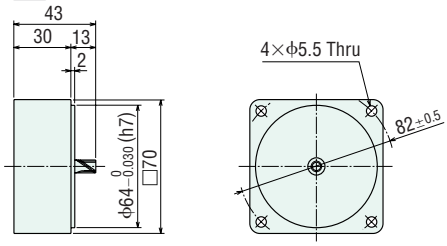

◇Capacitor (Included with the motors)

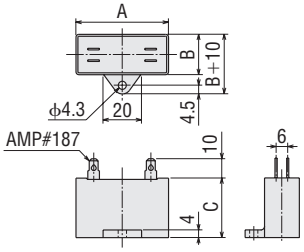

◇Capacitor Dimensions (mm)

Model		Capacitor Model	A	B	C	Mass (g)	Capacitor Cap
Pinion Shaft Type	Round Shaft Type						
3RK15GN-AW2J	**3RK15A-AW2J**	CH75CFAUL2	48	21	31	45	Included
3RK15GN-AW2U	**3RK15A-AW2U**	CH60CFAUL2	38	21	31	40	
3RK15GN-CW2J	**3RK15A-CW2J**	CH18BFAUL	38	21	31	35	
3RK15GN-CW2E	**3RK15A-CW2E**	CH15BFAUL	38	21	31	35	

■Connection Diagrams

- The direction of motor rotation is as viewed from the shaft end of the motor. CW represents the clockwise direction, while CCW represents the counterclockwise direction.
- Connection diagrams are also valid for the equivalent round shaft type.
- Specify the type of the capacitor to be included by entering **J**, **U** or **E** in the box (□) within the model name.

3RK15GN-AW2□
3RK15GN-CW2□

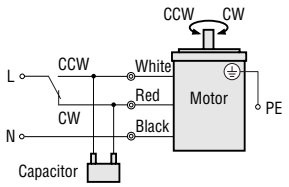

Clockwise:
To rotate the motor in a clockwise (CW) direction, turn the switch to CW.

Counterclockwise:
To rotate the motor in a counterclockwise (CCW) direction, turn the switch to CCW.

PE: Protective Earth

Note:

Connect a CR circuit to the forward/reverse select switch to protect the contact.

EPCR1201-2 is available as an optional surge suppressor. ➜ Page 123

RoHS

Reversible Motors

25 W

Frame Size: □80 mm

Lead Wire Type

Terminal Box Type

(Gearhead sold separately)

Right-angle gearheads (hollow shaft or solid shaft) can be combined.
Right-Angle Gearheads ➜ Page 108

Specifications – 30 Minutes Rating RoHS

Model Upper Model Name: Pinion Shaft Type Lower Model Name ( ): Round Shaft Type		Output Power	Voltage	Frequency	Current	Starting Torque	Rated Torque	Rated Speed	Capacitor
Lead Wire Type Dimension ①	Terminal Box Type Dimension ②	W	VAC	Hz	A	mN·m	mN·m	r/min	μF
TP **4RK25GN-AW2J (4RK25A-AW2J)**	**4RK25GN-AW2TJ (4RK25A-AW2TJ)**	25	Single-Phase 100	50	0.59	160	205	1200	10
				60	0.69	140	170	1450	
TP **4RK25GN-AW2U (4RK25A-AW2U)**	**4RK25GN-AW2TU (4RK25A-AW2TU)**	25	Single-Phase 110	60	0.56	140	170	1450	8.0
			Single-Phase 115						
TP **4RK25GN-CW2J (4RK25A-CW2J)**	**4RK25GN-CW2TJ (4RK25A-CW2TJ)**	25	Single-Phase 200	50	0.32	160	205	1200	3.0
				60	0.40	140	170	1450	
TP **4RK25GN-CW2E (4RK25A-CW2E)**	**4RK25GN-CW2TE (4RK25A-CW2TE)**	25	Single-Phase 220	50	0.29	140	205	1200	2.5
				60	0.35		170	1450	
			Single-Phase 230	50	0.30	160	205	1200	
				60	0.35	140	170	1450	

- Values shown for rated torque and starting torque are measured for operation without the friction brake installed.
- The **J**, **U** and **E** at the end of the model name indicate that the unit includes a capacitor. These letters are not listed on the motor nameplate. When the motor is approved under various safety standards, the model name on the nameplate is the approved model name.

TP: Contains a built-in thermal protector. If a motor overheats for any reason, the thermal protector is opened and the motor stops.
When the motor temperature drops, the thermal protector closes and the motor restarts. Be sure to turn the motor off before inspecting.

Product Line

Motor RoHS

Type	Model	
	Pinion Shaft Type	Round Shaft Type
Lead Wire	**4RK25GN-AW2J**	**4RK25A-AW2J**
	4RK25GN-AW2U	**4RK25A-AW2U**
	4RK25GN-CW2J	**4RK25A-CW2J**
	4RK25GN-CW2E	**4RK25A-CW2E**
Terminal Box	**4RK25GN-AW2TJ**	**4RK25A-AW2TJ**
	4RK25GN-AW2TU	**4RK25A-AW2TU**
	4RK25GN-CW2TJ	**4RK25A-CW2TJ**
	4RK25GN-CW2TE	**4RK25A-CW2TE**

Gearhead/Right-Angle Gearhead (Sold Separately) RoHS

Type	Gearhead Model	Gear Ratio
Long Life/Low Noise/ Parallel Shaft	**4GN□S**	**3, 3.6, 5, 6, 7.5, 9, 12.5, 15, 18, 25, 30, 36, 50, 60, 75, 90, 100, 120, 150, 180**
	4GN10XS (Decimal gearhead)	
Right-Angle/ Hollow Shaft	**4GN□RH**	**3, 3.6, 5, 6, 7.5, 9, 12.5, 15, 18, 25, 30, 36, 50, 60, 75, 90, 100, 120, 150, 180**
Right-Angle/ Solid Shaft	**4GN□RA**	**3, 3.6, 5, 6, 7.5, 9, 12.5, 15, 18, 25, 30, 36, 50, 60, 75, 90, 100, 120, 150, 180**

- Enter the gear ratio in the box (□) within the model name.

Gearmotor – Torque Table

- Gearheads and decimal gearheads are sold separately.
- Enter the code that represents the terminal box type "**T**" in the box (■) within the model name.
- Enter the gear ratio in the box (□) within the model name.
- A colored background ▭ indicates gear shaft rotation in the same direction as the motor shaft, while the others rotate in the opposite direction.
- The speed is calculated by dividing the motor's synchronous speed (50 Hz: 1500 r/min, 60 Hz: 1800 r/min) by the gear ratio. The actual speed is 2 - 20% less than the displayed value, depending on the size of the load.
- To reduce the speed beyond the gear ratio in the table, attach a decimal gearhead (gear ratio: 10) between the gearhead and the motor. In that case, the permissible torque is 8 N·m. When a gearhead of 1/25～1/36 is connected, the value for permissible torque is 6 N·m.

◇50 Hz

Unit = N·m

Model	Speed r/min	500	416	300	250	200	166	120	100	83	60	50	41	30	25	20	16	15	12.5	10	8.3
Motor/ Gearhead	Gear Ratio	**3**	**3.6**	**5**	**6**	**7.5**	**9**	**12.5**	**15**	**18**	**25**	**30**	**36**	**50**	**60**	**75**	**90**	**100**	**120**	**150**	**180**
4RK25GN-AW2■J **4RK25GN-CW2■J** **4RK25GN-CW2■E**	**4GN□S**	0.50	0.60	0.83	1.0	1.2	1.5	2.1	2.5	3.0	3.7	4.5	5.4	6.8	8	8	8	8	8	8	8

◇60 Hz

Unit = N·m

Model	Speed r/min	600	500	360	300	240	200	144	120	100	72	60	50	36	30	24	20	18	15	12	10
Motor/ Gearhead	Gear Ratio	**3**	**3.6**	**5**	**6**	**7.5**	**9**	**12.5**	**15**	**18**	**25**	**30**	**36**	**50**	**60**	**75**	**90**	**100**	**120**	**150**	**180**
4RK25GN-AW2■J **4RK25GN-AW2■U** **4RK25GN-CW2■J** **4RK25GN-CW2■E**	**4GN□S**	0.41	0.50	0.69	0.83	1.0	1.2	1.7	2.1	2.5	3.1	3.7	4.5	5.6	6.7	8	8	8	8	8	8

Permissible Overhung Load and Permissible Thrust Load

Motor (Round shaft type) ➜ Page 107
Gearhead ➜ Page 107

Permissible Load Inertia J for Gearhead

➜ Page 107

Dimensions (Unit = mm)

Mounting screws are included with gearheads.

◇Lead Wire Type ①

Mass: Motor 1.5 kg
Gearhead 0.65 kg

Motor Model	Gearhead Model	Gear Ratio	L1	CAD
4RK25GN-AW2■ **4RK25GN-CW2■**	**4GN□S**	**3～18**	32	A449A
		25～180	42.5	A449B

- Specify the type of the capacitor to be included by entering **J**, **U** or **E** in the box (■) within the model name.
  Enter the gear ratio in the box (□) within the model name.

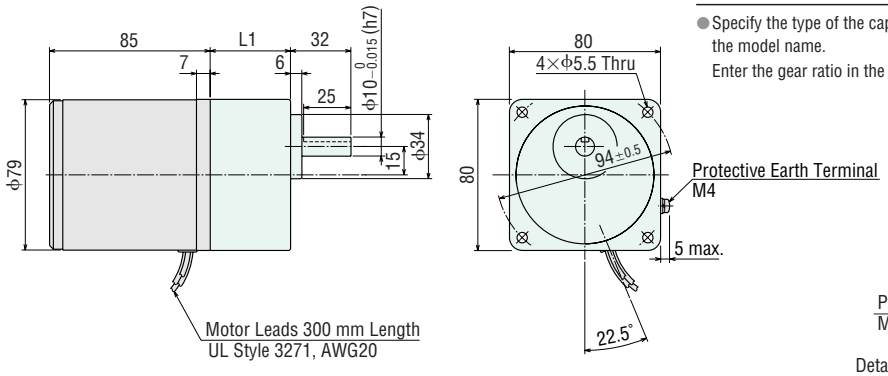

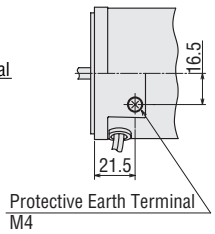

Detail Drawing of Protective Earth Terminal

◇Terminal Box Type ②

Mass: Motor 1.7 kg
Gearhead 0.65 kg

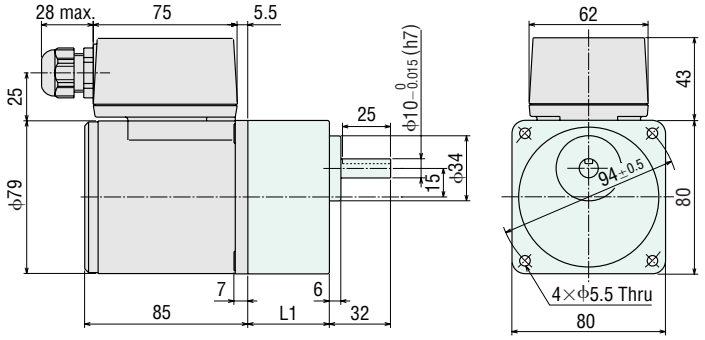

● Use cable with a diameter of ϕ6 ~ ϕ12 mm.

Motor Model	Gearhead Model	Gear Ratio	L1	CAD
4RK25GN-AW2T■	**4GN□S**	**3~18**	32	A451A
4RK25GN-CW2T■		**25~180**	42.5	A451B

● Specify the type of the capacitor to be included by entering **J**, **U** or **E** in the box (■) within the model name.
Enter the gear ratio in the box (□) within the model name.

◇Key and Key Slot

(The key is included with the gearhead)

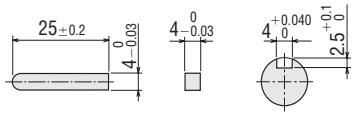

◇Shaft Section of Round Shaft Type

The mass and motor's dimensions (excluding the shaft section) are the same as those of the pinion shaft type.

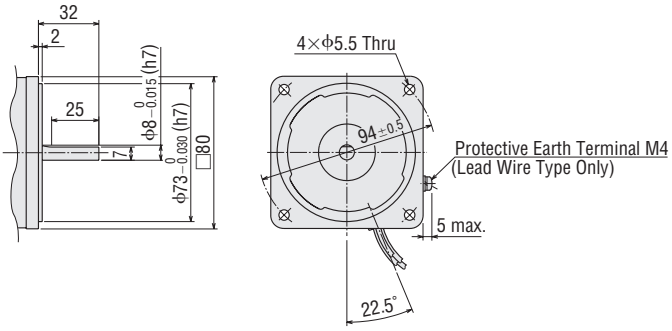

◇Decimal Gearhead

Can be connected to **GN** pinion shaft type.

4GN10XS

Mass: 0.4 kg

CAD A013

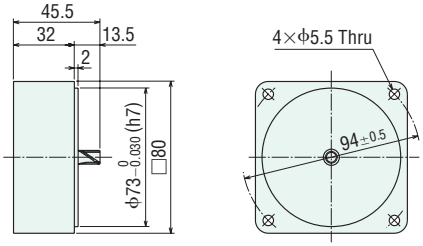

◇Capacitor

(Included with the motors)

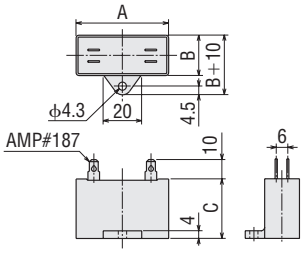

◇Capacitor Dimensions (mm)

Model Upper Model Name: Pinion Shaft Type Lower Model Name ( ): Round Shaft Type		Capacitor Model	A	B	C	Mass (g)	Capacitor Cap
Lead Wire Type	Terminal Box Type						
4RK25GN-AW2J (4RK25A-AW2J)	**4RK25GN-AW2TJ (4RK25A-AW2TJ)**	CH100CFAUL2	58	21	31	50	Included
4RK25GN-AW2U (4RK25A-AW2U)	**4RK25GN-AW2TU (4RK25A-AW2TU)**	CH80CFAUL2	48	21	31	45	
4RK25GN-CW2J (4RK25A-CW2J)	**4RK25GN-CW2TJ (4RK25A-CW2TJ)**	CH30BFAUL	58	21	31	50	
4RK25GN-CW2E (4RK25A-CW2E)	**4RK25GN-CW2TE (4RK25A-CW2TE)**	CH25BFAUL	48	21	31	45	

■Connection Diagrams

● The direction of motor rotation is as viewed from the shaft end of the motor. CW represents the clockwise direction, while CCW represents the counterclockwise direction.
● Connection diagrams are also valid for the equivalent round shaft type.
● Specify the type of the capacitor to be included by entering **J**, **U** or **E** in the box (□) within the model name.

Lead Wire Type	Terminal Box Type
4RK25GN-AW2□ **4RK25GN-CW2□**	**4RK25GN-AW2T□** **4RK25GN-CW2T□**

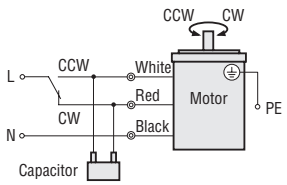

Clockwise
To rotate the motor in a clockwise (CW) direction, turn the switch to CW.

Counterclockwise
To rotate the motor in a counterclockwise (CCW) direction, turn the switch to CCW.

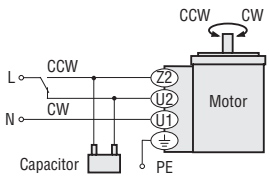

Clockwise
To rotate the motor in a clockwise (CW) direction, turn the switch to CW.

Counterclockwise
To rotate the motor in a counterclockwise (CCW) direction, turn the switch to CCW.

PE: Protective Earth

Note:
Connect a CR circuit to the forward/reverse select switch to protect the contact.
EPCR1201-2 is available as an optional surge suppressor. ➜ Page 123

RoHS

Reversible Motors

40 W

Frame Size: □90 mm

Lead Wire Type

Terminal Box Type

(Gearhead sold separately)

Right-angle gearheads (hollow shaft or solid shaft) can be combined.
Right-Angle Gearheads ➜ Page 108

Specifications – 30 Minutes Rating RoHS

Model Upper Model Name: Pinion Shaft Type Lower Model Name ( ): Round Shaft Type		Output Power	Voltage	Frequency	Current	Starting Torque	Rated Torque	Rated Speed	Capacitor
Lead Wire Type Dimension ①	Terminal Box Type Dimension ②	W	VAC	Hz	A	mN·m	mN·m	r/min	μF
TP **5RK40GN-AW2J (5RK40A-AW2J)**	**5RK40GN-AW2TJ (5RK40A-AW2TJ)**	40	Single-Phase 100	50	0.91	300	315	1250	16
				60	1.09	260	270	1450	
TP **5RK40GN-AW2U (5RK40A-AW2U)**	**5RK40GN-AW2TU (5RK40A-AW2TU)**	40	Single-Phase 110	60	0.88	260	270	1450	12
			Single-Phase 115		0.87				
TP **5RK40GN-CW2J (5RK40A-CW2J)**	**5RK40GN-CW2TJ (5RK40A-CW2TJ)**	40	Single-Phase 200	50	0.46	270	315	1250	4.0
				60	0.55	260	260	1500	
TP **5RK40GN-CW2E (5RK40A-CW2E)**	**5RK40GN-CW2TE (5RK40A-CW2TE)**	40	Single-Phase 220	50	0.43	270	315	1250	3.5
				60	0.48	260	260	1500	
			Single-Phase 230	50	0.43	270	315	1250	
				60	0.48	260	260	1500	

- Values shown for rated torque and starting torque are measured for operation without the friction brake installed.
- The **J**, **U** and **E** at the end of the model name indicate that the unit includes a capacitor. These letters are not listed on the motor nameplate. When the motor is approved under various safety standards, the model name on the nameplate is the approved model name.

TP: Contains a built-in thermal protector. If a motor overheats for any reason, the thermal protector is opened and the motor stops.
When the motor temperature drops, the thermal protector closes and the motor restarts. Be sure to turn the motor off before inspecting.

Product Line

Motor RoHS

Type	Model	
	Pinion Shaft Type	Round Shaft Type
Lead Wire	**5RK40GN-AW2J**	**5RK40A-AW2J**
	5RK40GN-AW2U	**5RK40A-AW2U**
	5RK40GN-CW2J	**5RK40A-CW2J**
	5RK40GN-CW2E	**5RK40A-CW2E**
Terminal Box	**5RK40GN-AW2TJ**	**5RK40A-AW2TJ**
	5RK40GN-AW2TU	**5RK40A-AW2TU**
	5RK40GN-CW2TJ	**5RK40A-CW2TJ**
	5RK40GN-CW2TE	**5RK40A-CW2TE**

Gearhead/Right-Angle Gearhead (Sold Separately) RoHS

Type	Gearhead Model	Gear Ratio
Long Life/Low Noise/ Parallel Shaft	**5GN□S**	**3, 3.6, 5, 6, 7.5, 9, 12.5, 15, 18, 25, 30, 36, 50, 60, 75, 90, 100, 120, 150, 180**
	5GN10XS (Decimal gearhead)	
Right-Angle/ Hollow Shaft	**5GN□RH**	**3, 3.6, 5, 6, 7.5, 9, 12.5, 15, 18, 25, 30, 36, 50, 60, 75, 90, 100, 120, 150, 180**
Right-Angle/ Solid Shaft	**5GN□RA**	**3, 3.6, 5, 6, 7.5, 9, 12.5, 15, 18, 25, 30, 36, 50, 60, 75, 90, 100, 120, 150, 180**

- Enter the gear ratio in the box (□) within the model name.

Gearmotor – Torque Table

- Gearheads and decimal gearheads are sold separately.
- Enter the code that represents the terminal box type "**T**" in the box (■) within the model name.
- Enter the gear ratio in the box (□) within the model name.
- A colored background ▭ indicates gear shaft rotation in the same direction as the motor shaft, while the others rotate in the opposite direction.
- The speed is calculated by dividing the motor's synchronous speed (50 Hz: 1500 r/min, 60 Hz: 1800 r/min) by the gear ratio. The actual speed is 2 - 20% less than the displayed value, depending on the size of the load.
- To reduce the speed beyond the gear ratio in the table, attach a decimal gearhead (gear ratio: 10) between the gearhead and the motor. In that case, the permissible torque is 10 N·m.

◇50 Hz

Unit = N·m

Model	Speed r/min	500	416	300	250	200	166	120	100	83	60	50	41	30	25	20	16	15	12.5	10	8.3
Motor/ Gearhead	Gear Ratio	**3**	**3.6**	**5**	**6**	**7.5**	**9**	**12.5**	**15**	**18**	**25**	**30**	**36**	**50**	**60**	**75**	**90**	**100**	**120**	**150**	**180**
5RK40GN-AW2■J **5RK40GN-CW2■J** **5RK40GN-CW2■E** / **5GN□S**		0.77	0.92	1.3	1.5	1.9	2.3	3.2	3.8	4.6	5.7	6.9	8.3	10	10	10	10	10	10	10	10

◇60 Hz

Unit = N·m

Model	Speed r/min	600	500	360	300	240	200	144	120	100	72	60	50	36	30	24	20	18	15	12	10
Motor/ Gearhead	Gear Ratio	**3**	**3.6**	**5**	**6**	**7.5**	**9**	**12.5**	**15**	**18**	**25**	**30**	**36**	**50**	**60**	**75**	**90**	**100**	**120**	**150**	**180**
5RK40GN-AW2■J **5RK40GN-AW2■U** / **5GN□S**		0.66	0.79	1.1	1.3	1.6	2.0	2.7	3.3	3.9	4.9	5.9	7.1	8.9	10	10	10	10	10	10	10
5RK40GN-CW2■J **5RK40GN-CW2■E** / **5GN□S**		0.63	0.76	1.1	1.3	1.6	1.9	2.6	3.2	3.8	4.7	5.7	6.8	8.6	10	10	10	10	10	10	10

Permissible Overhung Load and Permissible Thrust Load

Motor (Round shaft type) ➜ Page 107
Gearhead ➜ Page 107

Permissible Load Inertia J for Gearhead

➜ Page 107

Dimensions (Unit = mm)

Mounting screws are included with gearheads.

◇Lead Wire Type ①

Mass: Motor 2.5 kg
Gearhead 1.5 kg

Motor Model	Gearhead Model	Gear Ratio	L1	CAD
5RK40GN-AW2■ **5RK40GN-CW2■**	**5GN□S**	**3~18**	42	A452A
		25~180	60	A452B

- Specify the type of the capacitor to be included by entering **J**, **U** or **E** in the box (■) within the model name.
  Enter the gear ratio in the box (□) within the model name.

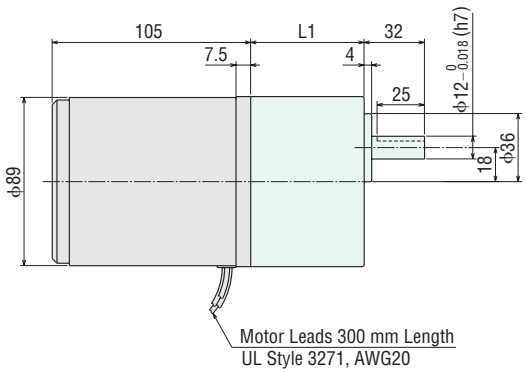

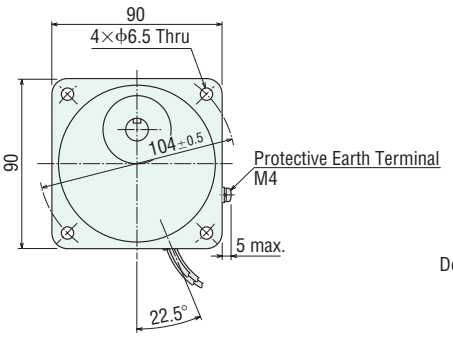

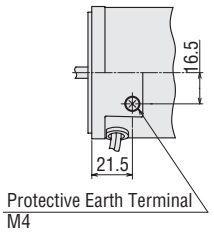

Detail Drawing of Protective Earth Terminal

◇Terminal Box Type ②

Mass: Motor 2.6 kg
Gearhead 1.5 kg

Motor Model	Gearhead Model	Gear Ratio	L1	CAD
5RK40GN-AW2T□	**5GN□S**	**3～18**	42	A454A
5RK40GN-CW2T□		**25～180**	60	A454B

● Specify the type of the capacitor to be included by entering **J**, **U** or **E** in the box (□) within the model name.
Enter the gear ratio in the box (□) within the model name.

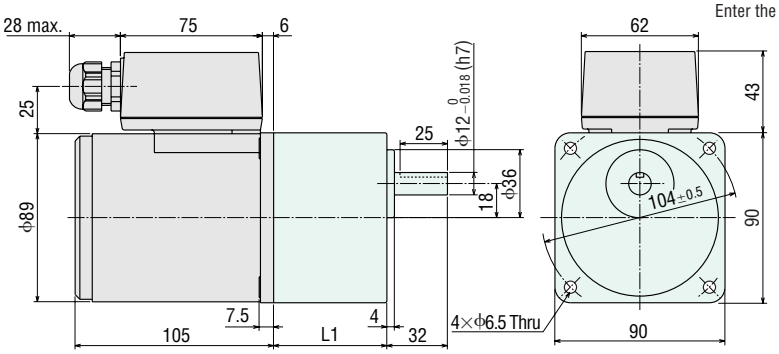

● Use cable with a diameter of φ6 ～ φ12 mm.

◇Key and Key Slot

(The key is included with the gearhead)

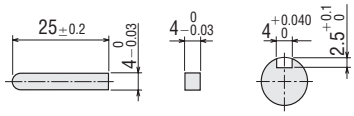

◇Shaft Section of Round Shaft Type

The mass and motor's dimensions (excluding the shaft section) are the same as those of the pinion shaft type.

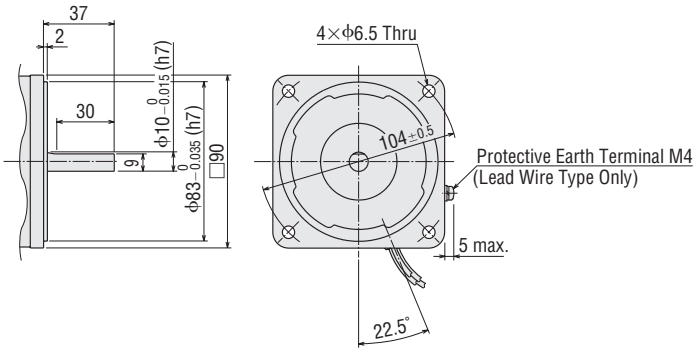

◇Decimal Gearhead

Can be connected to **GN** pinion shaft type.

5GN10XS

Mass: 0.6 kg

CAD A022

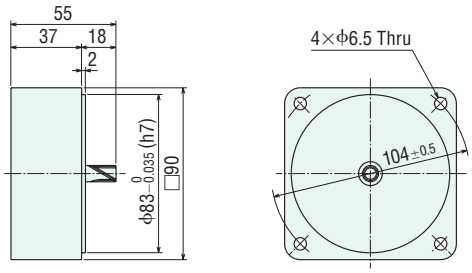

◇Capacitor (Included with the motors)

Dimension No. ①

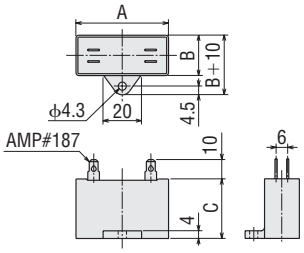

Dimension No. ②

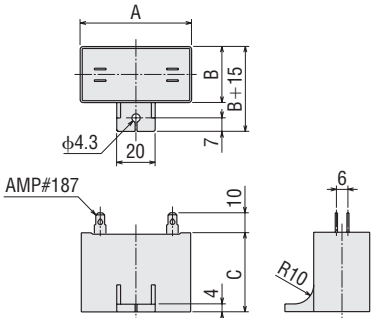

◇Capacitor Dimensions (mm)

Model Upper Model Name: Pinion Shaft Type Lower Model Name ( ): Round Shaft Type		Capacitor Model	A	B	C	Mass (g)	Dimension No.	Capacitor Cap
Lead Wire Type	Terminal Box Type							
5RK40GN-AW2J (5RK40A-AW2J)	**5RK40GN-AW2TJ (5RK40A-AW2TJ)**	CH160CFAUL2	58	23.5	37	75	②	Included
5RK40GN-AW2U (5RK40A-AW2U)	**5RK40GN-AW2TU (5RK40A-AW2TU)**	CH120CFAUL2	58	22	35	60	①	
5RK40GN-CW2J (5RK40A-CW2J)	**5RK40GN-CW2TJ (5RK40A-CW2TJ)**	CH40BFAUL	58	23.5	37	70	②	
5RK40GN-CW2E (5RK40A-CW2E)	**5RK40GN-CW2TE (5RK40A-CW2TE)**	CH35BFAUL	58	22	35	55	①	

Connection Diagrams

- The direction of motor rotation is as viewed from the shaft end of the motor. CW represents the clockwise direction, while CCW represents the counterclockwise direction.
- Connection diagrams are also valid for the equivalent round shaft type.
- Specify the type of the capacitor to be included by entering **J**, **U** or **E** in the box (□) within the model name.

Lead Wire Type	Terminal Box Type
5RK40GN-AW2□ **5RK40GN-CW2□**	**5RK40GN-AW2T□** **5RK40GN-CW2T□**
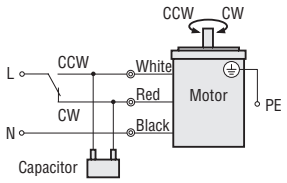 **Clockwise** To rotate the motor in a clockwise (CW) direction, turn the switch to CW. **Counterclockwise** To rotate the motor in a counterclockwise (CCW) direction, turn the switch to CCW.	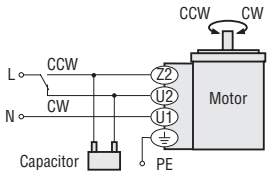 **Clockwise** To rotate the motor in a clockwise (CW) direction, turn the switch to CW. **Counterclockwise** To rotate the motor in a counterclockwise (CCW) direction, turn the switch to CCW.

PE: Protective Earth

Note:

Connect a CR circuit to the forward/reverse select switch to protect the contact.

EPCR1201-2 is available as an optional surge suppressor. ➜ Page 123